BISON®

GASOLINE HIGH PRESSURE WASHER

OWNERS MANUAL

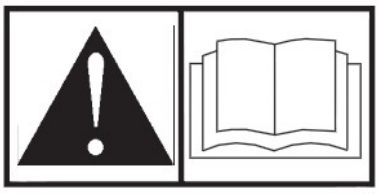

CAUTION Read the instructions before using the machine.

GENERAL SAFETY INSTRUCTIONS

- Read instructions carefully before operating this product.
- Keep bystanders away.
- This product is for outdoor use only.
- Ensure the engine is stopped before carrying out adjustments, cleaning or maintenance.
- Always turn off the engine and water supply when finished.
- Do not use the product if found to be damaged.
- Only use with detergents specified by the manufacturer. Other chemicals may compromise the safety of the product.
- Do not direct the pressure jet towards mechanical parts containing lubricant grease.
- Clean vehicle tyres from a minimum of 50cm to avoid damage by the high pressure jet.
- Do not point high pressure jets at people, animals, live electrical parts or the product itself.
- Do not use accessories such as hoses and connections that are not advised by the manufacturer.
- Engage the high pressure safety catch located on the gun when not in use.
- Do not step/stand on the high pressure hose.
- Ensure the nozzle is securely attached before using the Product. High pressure can cause it to be fired from the lance with considerable force, and could cause injury damage.
- Be ready for the kick-back force and the sudden torque on the spray assembly when operating the trigger.
- A high pressure jet can remove paint and other surface finish. It can also damage tarmac and grouting.
- Switch off completely when not attended.
- The hose is designed specifically for operation with high pressures. Take care to avoid damage that may prevent correct operation of the product.
- This product is not to be used by children or anyone with reduced capabilities.
- Always completely unwind the high pressure hose prior to operation.
- Make sure that the machine is switched off before unwinding the high pressure hose, and take care not to pull the machine over.
- Do not let the high pressure hose contact the hot engine exhaust.
- Do not use this product indoors.
- Keep exhaust emissions away from air intakes.

Explanation of the symbols on the appliance!

Warning! Read the operating instructions before use!

Warning! Do not inhale exhaust fumes!

Attention! Hot surfaces! Risk of burns!

Wear protective gloves!

Wear safety shoes!

Wear hearing protection!

Wear safety goggles!

High-pressure jets can be dangerous if misused. Do not aim at people, animals, active electrical equipment or at the appliance itself .

Regulate engine speed!

Choke:open/close,petrol:on/off

TECHNICAL PARAMETERS:

Model	130	170	180	180H
Permissible pressure	13Mpa	17Mpa	18Mpa	18Mpa
Rated pressure	70-90Mpa	12-16Mpa	15-17Mpa	15-17Mpa
Max flow	9.2L/min	9.2L/min	9.2L/min	10L/min
Engine	2.5-4HP	5.5-7HP	6.5-8HP	6.5-8HP
Rated rotation speed	3400RPM	3400RPM	3400RPM	3400RPM
Allowable temperature	0-60	0-60	0-60	0-60

MAINTENANCE AND STORAGE

- Do not attempt to modify the product in any way.
- To ensure good operating condition arrange regular servicing from an authorising agent.
- Only use replacement parts supplied by the manufacturer
- Only use fresh,clean and good quality fuel in the engine.
- Never operate the engine without oil.
- Never refuel in close proximity to naked flames, sparks or other sources of ignition e.g. cigarettes.
- Do not refuel when the engine is hot.
- Wipe up and correctly dispose of any fuel spillage immediately with a suitable medium.
- Move away from the refuelling areas before restarting the engine. Store fuel for short periods only in a suitable container away from heat and direct sunlight.
- Clean the pressure washer thoroughly after each use.
- Regularly check external nuts and fixings to ensure vibration caused by normal use has not begun loosen them. Remove the spark plug ignition lead from the back of the spark plug and position the lead to avoid accidental reconnection.
- Store the machine in a secure dry location out of reach of children.
- Empty the fuel tank before storage.

GETTING TO KNOW YOUR PETROL PRESSURE WASHER

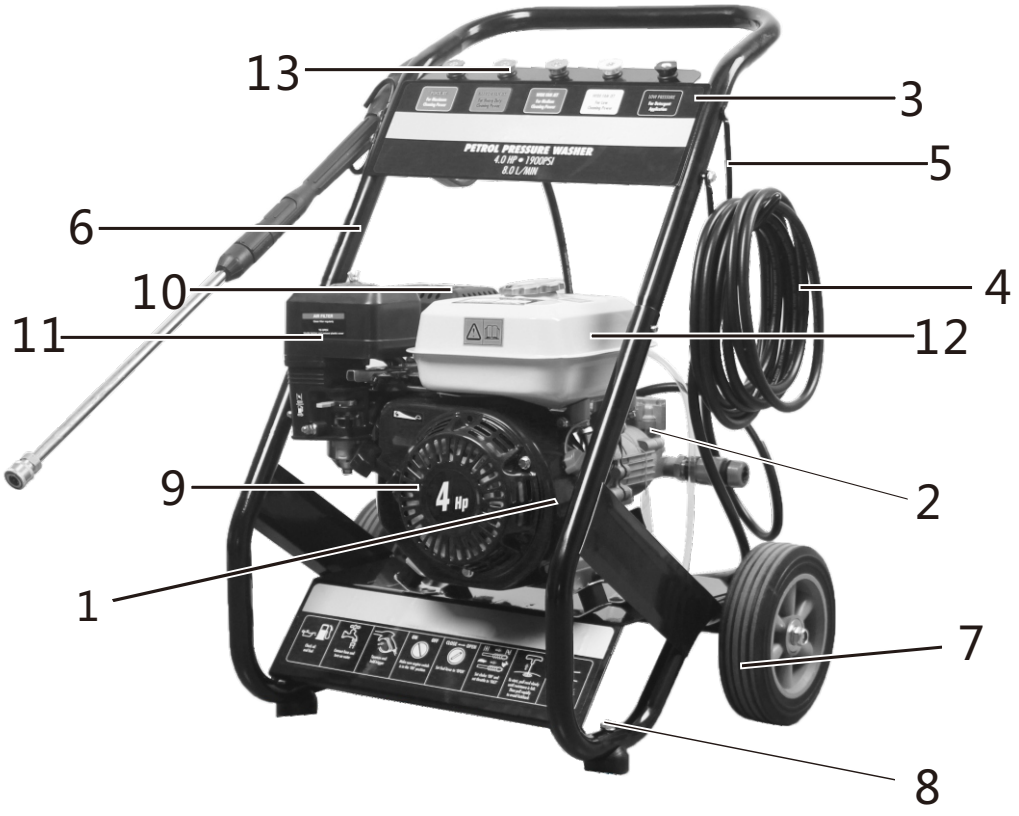

1.Engine 2.Pump 3.Upper frame 4.High pressure hose 5.Hook

6.Gun 7.Wheel 8.Lower frame 9.Engine Recoil Starter

10.Exhaust silencer(HOT do not touch) 11.Air Filter 12.Fuel tank 13.Nozzle

ASSEMBLY

NOTE: Every machine is tested during production, so there may a few drops of water inside the pump assembly.

FIG. 1

FIG. 2

FIG. 3

(Figs. 1.-3):
The upper handle can only be located in one way.
Insert the upper handle into the uprights of the lower base and secure in place using the nuts and securing dials provided.

Locate the hose and lance onto the upper frame and secure using the nuts and bolts provided

FIG. 4

FIG. 5

TO ASSEMBLE THE WHEELS (Figs. 4.-5):
Ensure the appliance is kept in the upright position.
Insert the axle bar into the axle support tube on the lower frame, tighten the bolt to secure in place.

Fit a wheel to the axle and secure using the locking nut provided.
Repeat this process for each wheel.

WARNING:
The engine is not provided with oil. It is necessary to fill the unit before starting the engine.

FIG. 6

FIG. 7

FIG. 8

ENGINE OIL (FIG. 6 & 7):
WARNING:
The engine is not provided with oil. It is necessary to fill the unit before starting the engine. The engine has two oil fill points at the front and back of the engine. Remove the desired cap and fill with the engine oil specified to the upper level mark.
Replace the oil filler cap.

PUMP OIL (FIG. 8 & 10):
WARNING:
Must take off this black plastic part out of the pump.

FIG. 9

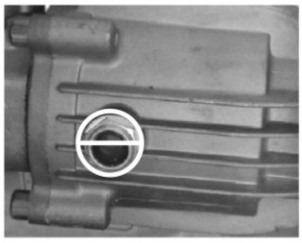

WARNING:
Check the capacity of pump oil and see if it's reached ?

FIG. 10

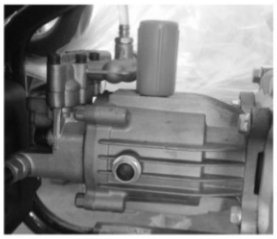

WARNING:
Install the red plastic breather parts in this place.

FIG. 11

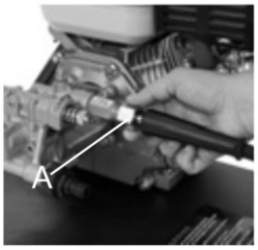

HIGH PRESSURE CONNECTION (Figs. 11.-14):
Connect the high pressure hose A to the unitis high pressure outlet.

FIG. 12

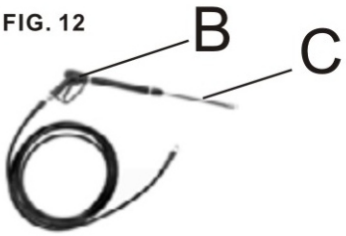

Connect the high pressure hose to the trigger B. Insert the lance C into the trigger. Press firmly against the spring tension and twist the coupling into the locked position. Insert the required nozzle by retracting the coupling at the end of the lance, ensure the nozzle is inserted securely

FIG. 13

INSERTING A NOZZLE (Fig 13):
To insert a nozzle, pull back the locking collar at the end of the lance, insert nozzle and release the collar. This will lock the nozzle in place. Ensure the nozzle is inserted correctly. If not it can fly out and injure personnel or damage property.

FIG. 14

CONNECTING THE HOSE (Fig 14):
Connect the hose to the unit's water inlet connector (Max. 10 bar, max. tempreture 40℃) and turn the water on completely.

OPERATION AND USE

WARNING: The engine is not filled with oil. It is necessary to fill the unit before starting the engine. The engine will not produce a spark unless sufficient oil is inside.
CAUTION: Do not run the engine with high or low oil level as this can cause engine damage.
CAUTION: Only use unleaded gasoline.
CAUTION: Avoid damaging your hose by ensuring it does not touch the hot exhaust during and after use.
CAUTION: Avoid damaging your pump by ensuring the water supply is clean and free of any foreign objects.
CAUTION: Inlet water temperature must not exceed 40 ℃ and 20PSI .
CAUTION: Never let the appliance operate for more than 2 minutes with the spray gun in the closed position.
CAUTION: Never operate the pressure washer with repeated and rapid on and off movements of the trigger

WATER SUPPLY FROM THE WATER MAIN

- Connect a water supply hose (not supplied) to the water inlet connection of the pressure washer.
- Turn on the water supply and pull the trigger until water is continually flowing out of the nozzle.

WATER SUPPLIER FROM A CONTAINER

- Unscrew the coupling part for the water inlet.
- Screw the suction hose with filter (not included) onto the water connection of the unit.
- Hang the filter in the container.
- Vent the unit before operation.
- Unscrew the high pressure line at the high pressure outlet of the unit.
- Switch on the unit and let it run until water is free of bubbles at the high pressure outlet.
- Switch off the unit and screw on the high pressure hose again.

FIG. 15

Pull the trigger to eliminate trapped air and wait for a steady flow of water to emerge from the spray nozzle.

NOTE:
In order to assist the first startup it is recommended to press the trigger during the pulling of the starter handle.

FIG. 16

To prevent accidental operation the trigger is fitted with a locking facility.

FIG. 17

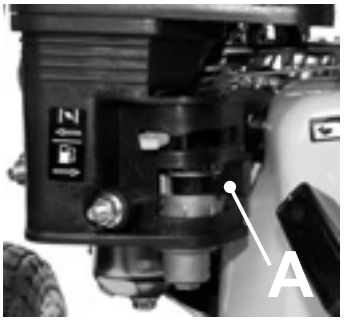

STARTING THE ENGINE (FIG. 17-20):
Push the fuel lever A to the right (On position).

FIG. 18

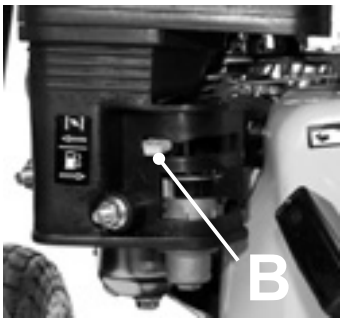

Push the choke lever B to the left; closing the choke for initial start-up.

NOTE: Do not use the choke if the engine or air tempreture is warm.

FIG. 19

Turn the engine switch clockwise to the ON position.

FIG. 20

Pull the black starting rope handle gradually until you feel resistance; then make a rapid pull.
NOTE: Return the starting rope handle gently to prevent damage to the starter assembly.
Do not pull the rope all the way out as this can damage the starter assembly.

FIG. 21

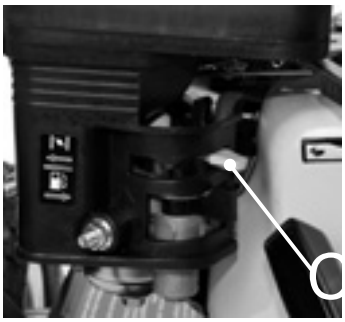

Let the engine idle for a short while to preheat before pushing the choke lever C to the right.

FIG. 22

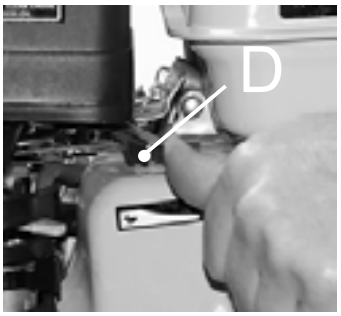

When the appliance is in operation, the speed can be adjusted by moving the throttle D control lever to the high position (indicated by a hare).
NOTE: There is a stop bracket on the throttle control lever, do not force this bracket as it can damage the engine.

FIG. 23

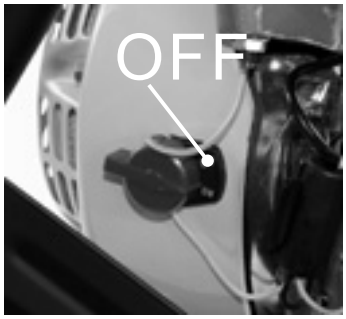

STOPPING THE ENGINE (Fig 23-24):
In an emergency turn the engine switch anticlockwise to the OFF position to stall the engine.To stop the appliance normally use the following sequence.

FIG. 24

Turn the engine switch anticlockwise to the OFF position. Then slide the fuel lever E to the right; OFF position.
CAUTION: When you have finished working turn off the engine. When the machine is switched off, always discharge the pressure by pressing the trigger.

ADJUSTING THE SPRAY PATTERN (Fig.25)
You have the choice of 4 different colour coded nozzles giving you different spray patterns to choose from:
0°nozzle (Red): This nozzle delivers a pinpoint stream and is extremely powerful. It covers a very small area of cleaning. This nozzle should only be used on surface that can withstand this high pressure such as metal or concrete. Do not use on wood.
15°nozzle (Yellow): This nozzle delivers a powerful 5 degree spray pattern for intense cleaning of small areas. This nozzle should only be used on areas that can withstand the high pressure from this nozzle.
25°nozzle(Green): This nozzle delivers a 25 degree spray pattern for intense cleaning of larger areas.This nozzle should only be used on areas that can withstand pressure from this nozzle.
40°nozzle (White): This nozzle delivers a 40 degree spray pattern and a less powerful stream of water. It covers a wide area of cleaning. This nozzle should be used for most general cleaning jobs.
Low pressure nozzle (Black): This nozzle is used to apply chemicals or cleaning solutions. It has the least power stream.

FIG. 25

NOTE:
Before using the pressure washer to clean patio paving slabs it is advisable to test a small area first, some paving slabs are manufactured from inferior materials and the use of a pressure washer could damage the surface.

USING THE DETERGENT FACILITY (Fig. 26)

Fill a suitable container with pressure water detergent. Do not use washing up liquid as it contains salt.
Please follow the instructions on the container. Most automobile detergents are a combination of a detergent and a wax solution. The viscosity (thickness) of the detergent will increase in cold weather. It is recommended that this type of detergent is diluted with water before filling the container. When using combination wash and wax solutions we recommend that they are diluted before use. As a general guide we would recommend a dilution rate of 50/50. However a trial and error process would determine the ideal dilution rate for a particular detergent.

NOTES:

A thick viscous detergent would not flow freely from the detergent tank and the residue would cause a blockage flow system. After using the detergent facility it should be flushed thoroughly using copious amount of water. To activate detergent delivery, fit the Black LOW PRESSURE nozzle to the and of the lance. Submerge the and of the detergent pick up pipe into your container of pressure water detergent. Suction and mixing will occur automatically as the water flows though the pump.

FIG. 26

FIG. 27

CLEARING A BLOCKAGE (Fig. 27)

If at any time the flow rate stutters or is inconsistent, release the trigger and switch OFF the machine. Squeeze the trigger to relieve any pressure and check the jet in the end of the lance for any blockage. If a blockage is suspected use some wire to clean the inside of the nozzle.

SAFETY INSTRUCTIONS FOR THE ENGINE

1.Before operating the engine, be sure to read all instructions carefully as injury or permanent damage to equipment may occur.
2.Run the engine in a well ventilated area.
3.Ensure the appliance is at least one metre away from building walls or other equipment.
4.Keep the appliance away from flammable liquids such as petrol.
5.Refuel in a well ventilated area with the engine switched off and avoid sparks or naked flames.
6.When refuelling ensure that you do not overfill the fuel tank.
7.If any fuel is spilled ensure it is deaned up thoroughly before restarting.
8.Ensure the fuel cap Is located securely.
9.The exhaust mufflers get very hot and will remain hot for sometime after the engine is switched off.
10.Ensure the appliance is cooled before transporting or storing.

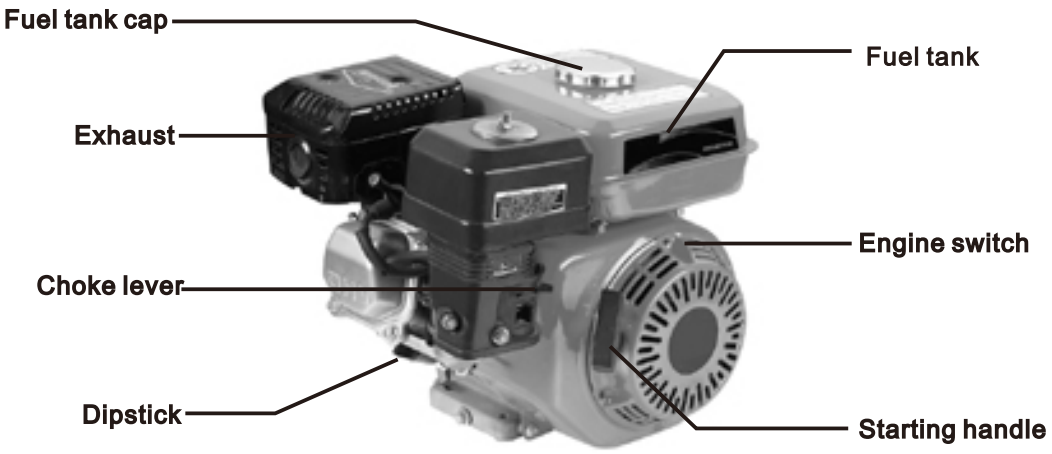

PRE-OPERATION INSPECTION

⚠**CAUTION:**

Engine oil is a key factor in deciding the engine's performance. **Do not use** engine oil with additives or 2-stroke gasoline engine oil, as they do not have enough lubricating properties, which may shorten the engine's service life.

1.Check the engine is on level ground.

2.15W-30 is recommended for general all temperature use.

3.Remove the dipstick and clean it.

4.Reinsert the dipstick into the oil filler without screwing it in and check the oil level.

5.If the oil level is too low add the required amount of engine oil to the oil filler mark.

6.Replace the dipstick securely.

CAUTION:

⚠Running with insufficient engine oil may damage the engine severely.

FIG. 28

FUEL AND FUEL TANK:

Only use unleaded petrol or fuel with an octane number over 86. Using unleaded petrol or fuel will decrease the possibility of producing carbon deposit and prolong the engines service life. Never use old or polluted petrol or fuel or a mixture of petrol and engine oil. Make sure the fuel is free of dirt and water.

⚠ **CAUTION:**

Handle fuel with care because it can damage plastic and painted surfaces.Remove the fuel filler cap and check the fuel level. If the fuel lever is too low, refuel the tank. Remember when adding fuel do not fill over the fuel filter shoulder.

WARNING:

Petrol is extremely flammable and is explosive under certain conditions. Refuel in a well ventilated area with the engine stopped. Do not smoke or allow flames and sparks in the area where petrol is stored or where the fuel tank is refuelled. After refuelling make sure the fuel cap is returned securely.Be careful not to spill fuel when refuelling. Spilled fuel or fuel vapour may ignite. If any fuel is spilled make sure the area is dry before starting the engine.

FUEL TANK FILTER (Fig.29):

After every 150 hours of running or every three months the fuel tank filter should be removed and cleaned. Remove the fuel tank filler cap and the filter, clean the filter thoroughly using environmentally friendly water based degreasing agent and re-fit.

OIL LEVEL SWITCH:

The engine oil alarm is designed to prevent the operator starting the engine when the oil in the crankcase is insufficient. Running with insufficient oil will damage the engine. Once the oil level in the crankcase is too low, the engine oil alarm will stall the engine automatically to avoid damage while the engine switch is still ON.

FIG. 29

FIG. 30

AIR FILTER (Fig.30):

After every 100 hours of running or every month, the air filter should be removed and examined for deterioration and cleaned. Clean the air filter thoroughly using environmentally friendly water based degreasing agent. Allow to dry fully then replace the air filter. Never run the engine without the air filter fitted.

STORAGE:

If the engine is not to be used or is to be stored for more than one month the following storage procedure should be carried out.

1. Drain all the fuel from the fuel tank and the carburettor ensure that all the fuel has been removed.
2. Remove the spark plug and pour approximately one tablespoon full of clean engine oil into the spark plug hole.
3. With the ignition turned OFF gently pull on the recoil starter cord several times.
4. Re-fit the spark plug and continue to pull the recoil starter cord until the piston is on the compression stroke (when resistance is felt) then stop pulling.
5. Store the pressure washer in a dry well ventilated place under a cover to prevent any dust or debris from accumulating on the pressure washer.

WINTER AND LONG TERM STORAGE:

If the pressure washer is not to be used for more than 3 months or if there is a danger of ice or frost during winter months the pump unit will require protection to prevent seizing and damage caused by freezing.

MAINTENANCE

EXHAUST CONTROL SYSTEM

With the engine running, carbon monoxide, nitrogen oxide and hydrocarbon are produced, and in certain conditions nitrogen oxide and hydrocarbon will react together to make smoke while carbon monoxide is toxic, so exhaust control is very important. The manufacturer decreases exhaust emissions by introducing poor-fuel carburettors and other devices to solve the problem. To keep the exhaust of your engine within the standard exhaust emission values, pay attention to the following:

MAINTENANCE

Maintain the engine periodically in accordance with the maintenance schedule. The maintenance schedule is made out on the basis of normal use in normal conditions. If using under heavy load, dusty or wet conditions or in high temperature, more frequent maintenance will be necessary.

REPLACEMENT OF PARTS

We recommend that you use parts that are supplied by the manufacturer or equivalent quality parts. Replacement parts of inferior quality may impair the effectiveness of the exhaust control system.

MODIFYING

Modifying the exhaust control system may make exhaust emissions exceed statutory limits. Illegal modifications are:

1. Dismantling or modifying any part of the air inlet or outlet system.
2. Modifying or removing speed adjustment controls or connections which may result in the engine running outside its set parameters.

PROBLEMS AFFECTING EXHAUST EMISSIONS

1. Difficulty in starting or stopping.
2. Erratic idling.
3. Giving off black smoke or excessive fuel consumption.
4. Poor ignition spark or no spark.
5. Ignition too advanced. If you have any of these above problems please contact your dealer.

CAUTION:

Before carrying out any maintenance to the machine release any pressure and remove the water connection.

WATER SUCTION FILTER CHECKING

Check periodically in order to avoid deposits clogging it.

SPARK PLUG MAINTENANCE

After every 50 hours clean the spark plug with a brush. If the insulator on the spark plug is damaged replace it immediately. Check the spark plug gap with a feeler gauge, the gap should be 0.7 - 0.8mm. If adjustment is necessary bend the side electrode carefully. Check the spark plug gasket is in good condition or replace with a new one. Screw in the spark plug to the bottom first by hand and then tighten by using a spark plug wrench. If a new spark plug is used, twist a 1/2 more turn after impacting the gasket. If using the original one twist 1/8 -1/4 more turn.

CAUTION:

The spark plug eliminator should be serviced at least once every 100 hours of operation so as to keep it in good condition.

WARNING:

The muffler is very hot during running the engine and for a prolonged period after stopping. Only service after the engine cools down completely.

Unscrew two nuts and remove the exhaust elbow from the engine body.

Unscrew five screws from the muffler guard and take it out.

Unscrew from the spark plug eliminator and separate from the muffler.

Clean the spark eliminator mesh with a wire brush.

Reinstall the spark eliminator in reverse order of removal.

CAUTION:

Be careful not to damage the spark eliminator. Never use a damaged spark eliminator.

CARBURETTOR IDLING ADJUSTMENT:

Start and pre-heat the engine until it reaches normal working temperature. Obtain standard idling by adjusting the throttle fixing screw under the engine, Standard idling: 3400 $\pm$300rpm.

TRANSPORT

Transport with the fuel switch in the off position. Ensure the engine is cooled so as to avoid the risk of burns or fire.

CAUTION:

Do not tilt the engine to avoid spilling fuel. Spilled fuel or fuel vapour may ignite.

STORAGE

If the engine is not to be used for a long period of time ensure it is stored correctly. Make sure the storage area is dry and free of dust.

PREPARE FOR STORAGE

Disconnect the spark plug. Put a spoonful of fresh engine oil into the cylinder and rotate the engine to distribute the oil evenly. Replace the spark plug. Pull the starting rope until you feel resistance and then keep pulling so as to align the arrow of the starting sleeve with the hole of the starter: This will close both the inlet and outlet valves to help prevent the engine rusting inside.Cover the engine to keep it free of dust.

REMOVAL FROM STORAGE

Before re-using, service the engine in accordance with the instructions in the following table.

STORAGE TIME	SERVICE ITEM
Within one month	No service needed
One - Two months	Drain out original fuel of the fuel tank and refuel
Two months - One year	Drain out original fuel of the fuel tank and refuel
	Drain out the fuel in the carburettor 1
	Empty the deposit cup 2
Above One year	Drain out original fuel of the fuel tank and refuel
	Drain out the fuel in the carburettor 1
	Empty the deposit cup 2
	Move the engine from the storage place, and start up

1 Unscrew the drain plug and drain out the fuel in the carburettor:

2 Turn off the engine switch first, disconnect the deposit cup and empty it.

NOTE:

Do not dump oil containers or discarded engine oil into the ground. For environmental protection take discarded engine oil in a closed container to a recycling station.

WARNING:

Fuel is extremely flammable and explosive under certain conditions. Keep cigarettes, naked flames and sparks away from operating site.

To keep the engine in sound condition, the user should maintain it according to the table below.

CAUTION:

Use parts that are supplied by the manufacturer, otherwise damage to the engine may occur.

WARNING:

Stop the engine before servicing. If servicing is required with the engine running ensure there is good ventilation in the area. Exhaust emissions contain toxic carbon monoxide which may cause injury or be fatal if inhaled.

ENGINE OIL REPLACEMENT

Place the machine on a level surface and warm up the engine for several minutes. Then stop the engine.

Remove the oil filler cap

Place an oil pan under the engine. Remove the oil drain plug so that the oil can be completely drained. You will need to use a tube or other similar device to prevent the oil leaking onto the frame of the pressure washer.

Check the oil drain plug, gasket oil filler cap and O-ring and if damaged replace.

Reinstall the oil drain plug.

Add engine oil up to the upper level of the dipstick.

NOTE:

Do not dump oil containers or discard engine oil into rubbish boxes or into the ground. For environmental protection take discarded engine oil in a closed container to a recycling station.

NOTES:

* Only for inside ventilating double-core carburettors.

**Only for paper core air cleaners.

1.More often than in schedule if used in dusty conditions

2.Items to be done by dealer unless you are fully trained and equipped to do so.

Item		Each time	First month or 20 hours	Each month or 50 hours	Each 6 months or 100 hours	Each year or 300 hours
Engine oil	Oil level check	✔				
	Replace		✔		✔	
Reduction gear oil	Oil level check	✔				
	Replace		✔			
Clean	Check	✔				
	Air cleaner			✔1	✔1*	
	Replace					✔**
Deposit cup	Clean				✔	
Spark plug	Clean, adjust				✔	
	Replace					✔
Spark eliminator	Clean				✔	
Idling	Clean, adjust					✔2
Valve clearance	Clean, adjust					✔2
Fuel tank & fuel filter	Clean					✔2
Fuel supply line	Check					

PUMP NOTICE

1.For the convenience of transport, Pump without machine oil, and breather plug is not installed. Please add 15W/40 or 30 machine oil before using. Machine oil quantity is subject to slightly not too oil lens center line, then install the breather plug.

2.After using 20 hours of the new machine, pour the machine oil out, and add the appropriate amount of kerosene, fuel is according to standard a little than oil lens center line. Operate the pump without load in 10-15 seconds, then close the machine and pour out the kerosene, add the new oil.

3.Please check the oil mass before using .If the oil level is less than 1/2 oil lens , it's needs to add the oil to the oil lens center line.

4.Accumulative use after 100 hours , change the oil in the same way . And every 100 hours to change the oil . It's very important to Extend the service life of the pump

TROUBLESHOOTING

PUMP TROUBLESHOOTING

TROUBLE	PROBABLE CAUSE	REMEDY
Fluctuating pressure	Pump sucking in air	Check connection are tight
	Valves dirty, worn out or seized	Contact customer helpline
	Blocked jet	Remove blockage using jet cleaning tool
Water leakage from pump	Seals worn out	Contact customer helpline
The pump does not reach the required pressure	Pump sucking in air from connections or hose	Check tightness of all connections
	Suction/delivery valves are clogged	Clear or replace valves. Have machine checked by Service Centre
	Unload valves are stuck	Loosen and re-tighten regulating screw
	Lance or nozzle worn out	Check and/or replace
Pump is running but no water delivery	Kinked inlet and or pressure hose	Check, straighten and replace if required
	Blocked inlet filter	Remove and clean filter
	Blocked jet	Remove blockage using the jet cleaning tool

ENGINE TROUBLESHOOTING

FAULT		PROBABLE CAUSE			REPAIR
Engine won't start Low engine output Engine runs erratically	Insufficient compression	Loose spark plug			Tighten plug
		Loose cylinder head bolt			Tighten bolt
		Damaged gasket			Replace gasket
	Sufficient compression	**FUEL SYSTEM PROBLEMS**			
		No fuel supplied to combustion chamber	Insufficient pulling speed for starting rope		Pull rope sharply
			Foreign matter in fuel tank		Clean tank
			Clogged fuel line		Clean fuel line with dealers advice
			No fuel in tank		Supply fuel
			Fuel tap not open		Open tap
		FUEL SYSTEM PROBLEMS			
		Combustion chamber supplied with fuel	Poor spark	Spark plug dirty with carbon or wet with fuel	Remove carbon or dry spark plug
				Damaged spark plug	Replace spark plug
				Faulty magneto	Consult dealer
			Good spark	Improper adjustment of carburetor	
				Insufficient pulling speed for starting rope	Pull rope sharply
		Wrong grade of fuel used			Check grade of fuel
		Overloaded			Check the working conditions
		Overheating			

PUMP PARTS DRAWING

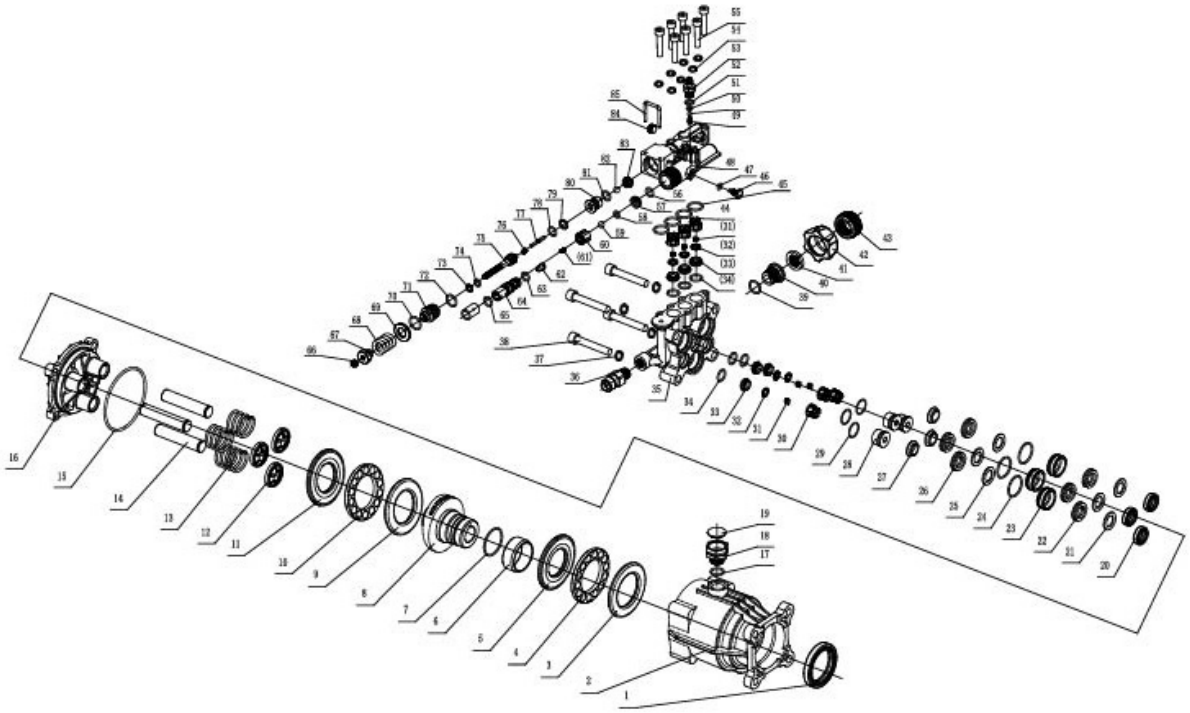

No	name	QTY	No	name	QTY	No	name	QTY
1	Oil seal	1	30	valve plank	3	59	ball	1
2	flange plate	1	31	valve spring	6	60	valve seat	1
3	51108-F bearing(loose)	1	32	valve washer	6	61	spring	1
4	51109-F bearing	1	33	valve base	6	62	nozzle	1
5	51110-F bearing(close)	1	34	O-ring	6	63	O-ring	1
6	steel lagging	1	35	pump head	1	64	nipple	1
7	O-ring	1	36	temperature control valve	1	65	O-ring	1
8	cam	1	37	oil cap washer	4	66	nut	1
9	51108-E(loose)	1	38	screw	4	67	nut	1
10	51109-E bearing	1	39	O-ring	1	68	spring	1
11	51110-E(close)	1	40	inlet pipe	1	69	washer	1
12	spring plate	3	41	gasket	1	70	O-ring	1
13	piston spring	3	42	ring nut	1	71	vale cap	1
14	piston	3	43	ring nut	1	72	O-ring	1
15	O-ring	1	44	valve plank	3	73	uncork ring 1	1
16	pump crankcase	1	45	O-ring	4	74	O-ring	1
17	O-ring	1	46	plug2	1	75	valve	1
18	oil plug seat	1	47	O-ring	1	76	valve spring	1
19	oil plug cover	1	48	pump body	1	77	pin	1
20	oil seal	3	49	spring	1	78	O-ring	1
21	assistant water seal mat	3	50	ball	1	79	uncork ring 2	1
22	assistant water seal	3	51	O-ring	1	80	top seat	1
23	pilot seat	3	52	O-ring	1	81	O-ring	1
24	O-ring	3	53	connector	1	82	ball	1
25	main water seal mat	3	54	oil cap washer	7	83	base	1
26	main water seal	3	55	screw	7	84	plug1	1
27	water seal washer	3	56	O-ring	1	85	u-plug	1
28	bilging valve bonnet	3	57	valve	1	86		
29	O-ring	3	58	O-ring	1	87		